SPECIFICATION DRAWING

Location:

Product #: CHB0021-22-XX-SH-00X-XX

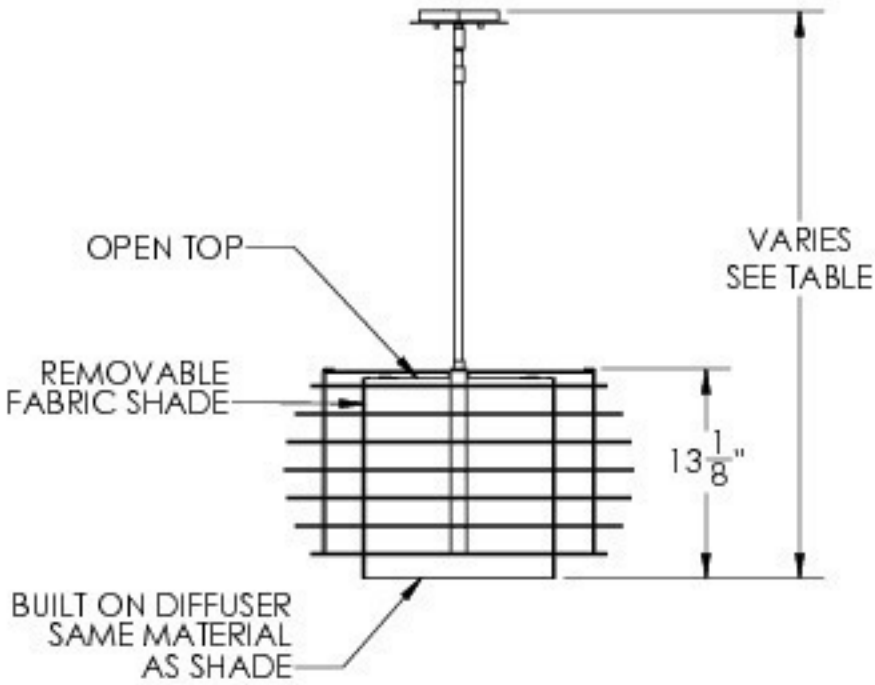

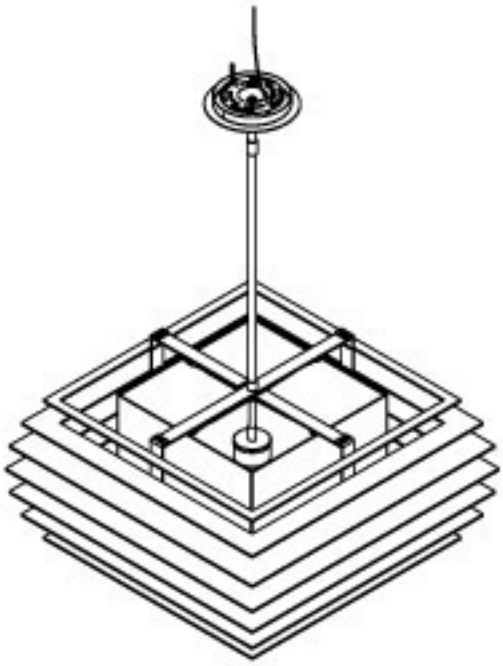

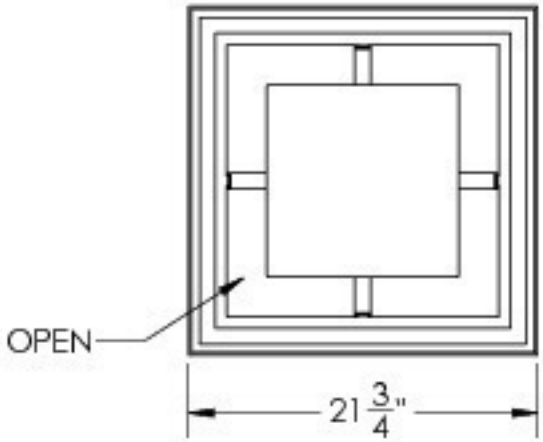

HEIGHT OPTIONS			
PRODUCT #	Fixed or Adj.	Overall Height	Pitch Allowance
CHB0021-22-XX-SH-001	Fixed	18.4"	0-5 Degrees
CHB0021-22-XX-SH-002	Adjustable	24.2" to 29.9"	0-25 Degrees
CHB0021-22-XX-SH-003	Adjustable	35.5" to 53"	0-45 Degrees
CHB0021-22-XX-SH-004	Adjustable	53" to 88"	0-45 Degrees

ELECTRICAL OPTIONS				
Product #	Electrical Type	Bulb Type	Wattage	Socket Type
CHB0021-22-XX-SH-00X-E2	Incandescent	A19	60	Medium E26
CHB0021-22-XX-SH-00X-G2	Flourescent	CFL/LED RETRO	13	GU-24

Bulbs Not Included

Mounting Packet: Y	Electrical Type: SEE TABLE
Approximate lbs.: 20	Bulb Qty: 4 Bulb Type: SEE TABLE
Finish: SEE WEB SITE FOR OPTIONS	Wattage: SEE TABLE Voltage: 120
Top Diffuser: Open	Socket Type: SEE TABLE
Bottom Diffuser: FABRIC DIFFUSER	UL Location: Dry

Mounting Detail

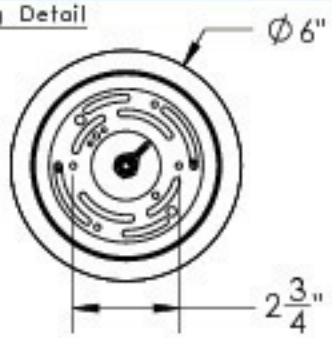

ArtisanCraftedHome

Bringing Extraordinary Artistry, Beauty and Style to Your Life.